pump for all, all for pump

KS Q 9001:2009/ISO 9001:2008

Screw Pumps

A-RYUNG
www.aryung.co.kr

Screw pumps

Application 용도

1. 공작기계
2. 깊은 홀을 뚫는 기계
3. 일반적인 펌프기능
4. 제철산업
5. 제지기계
6. 풍력산업
7. 조선
8. 프랜트 산업
9. 댐건설

1. Cooling and lubrication on metal working machine
2. Deep hole driving machines
3. General purpose pumping for lubricating machine
4. Steel industry
5. Paper industry
6. Wind velocity industry
7. Shipbuilding industry
8. Plant industry
9. Dam industry

How a Screw Pump Work 펌프 작동 원리

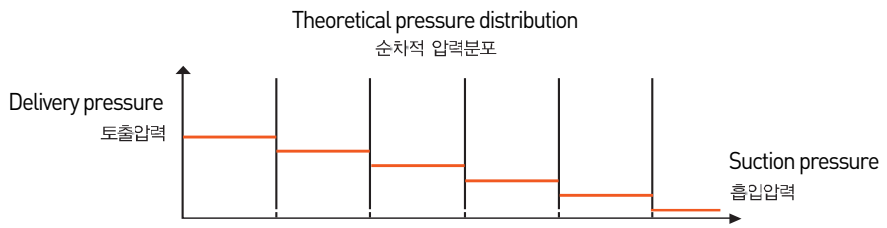

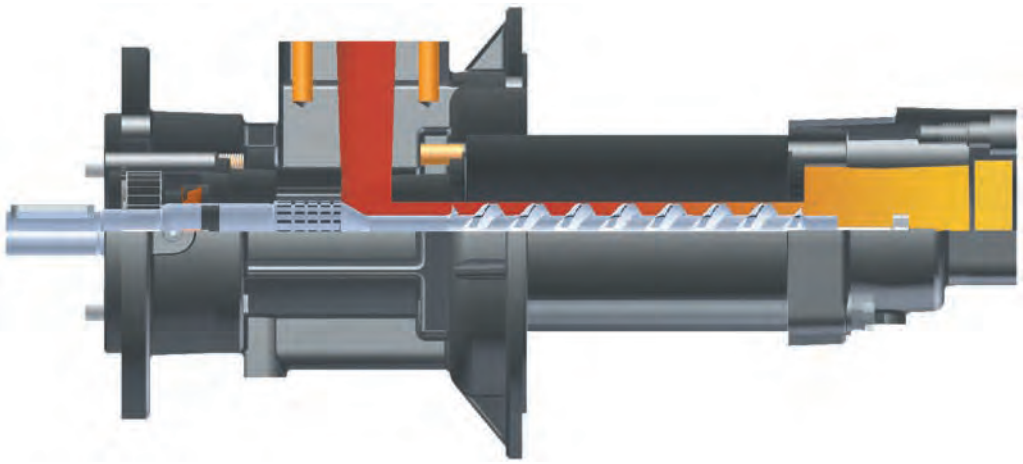

스크류 펌프는 흡입측에서 토출측으로 진행 되어질때 펌프 안에 발생하는 압력을 흡입과 토출이 일정하게 유지할 수 있게 펌프 안에 내부 드레인 홀이 설치되어 있어서 내부에 스크류가 역학적으로 균형이 잡히게 설계 되어있다.

Due to the three screw set, The area between the screw thread and pump body form sealed chambers that are of uniform volume. Rotation of the screws forms and moves these chambers from the suction to discharge port. Pressure is raised along the screw length until it reaches the required working pressure. This also provides internal lubrication and provides the screws with hydrostatic balancing..

Pump Features 펌프 특징 및 장점

1. 저소음
2. 맥동이 낮음
3. 자흡력이 뛰어남
4. 고점도 사용이 가능
5. 내구성이 뛰어남

1. Very low noise levels
2. Very low pulsation level
3. High self priming capacity
4. Wide compatibility with low viscosity media
5. Low pump maintenance

AJ-250 series

AJ - 250 - 3 / VB

Pump Type 펌프 형식
AJ : Screw pump

Delivery Pressure 사용 압력
3 : 3.0MPa, 4 : 4.0MPa
5 : 5.0MPa, 6 : 6.0MPa, 7 : 7.0MPa

Outlet Port 토출구
No Mark : Flange
VB : Relief valve

Functional characteristics standard version 기능 표준서

Delivery flow [유량]	1 ~ 50ℓ /min
Admissible delivery pressure* [사용압력]	MAX* 7.0MPa
Admissible suction pressure [흡입압력]	-0.05 ~ 0.1 MPa
Kinematics viscosity [사용점도]	2 ~ 32 cSt
Admissible temperature [사용온도]	0 ~ 80℃
Driving speed [회전속도]	2Poles [3000~3600 rpm], 4Poles [1500~1800 rpm]
Average noise level [소음]	55 ~ 75 dB(A) at 3600 rpm according to pump dimension
Recommended filtration [권장 필터]	25㎛MAX*, Suction side (not abrasive contaminant)
Direction of rotation [회전방향]	Clockwise, as seen from the driving side

주의 사항 : 부식 및 녹 발생 유체 사용 시 펌프의 수명 및 성능저하의 원인이 됩니다.
WARNING : To prohibit liquid which causes corrosion & rust. Otherwise It might be slowed down performance and a long pump life.

※ 상기제품은 고압 쿨란트 전용 펌프입니다. 다른 용도로 펌프로 사용하고자 할 때는 필히 본사 기술팀에 문의 바랍니다.
※ For different functional characteristics, please contact our technical team.

External dimensions 외형도

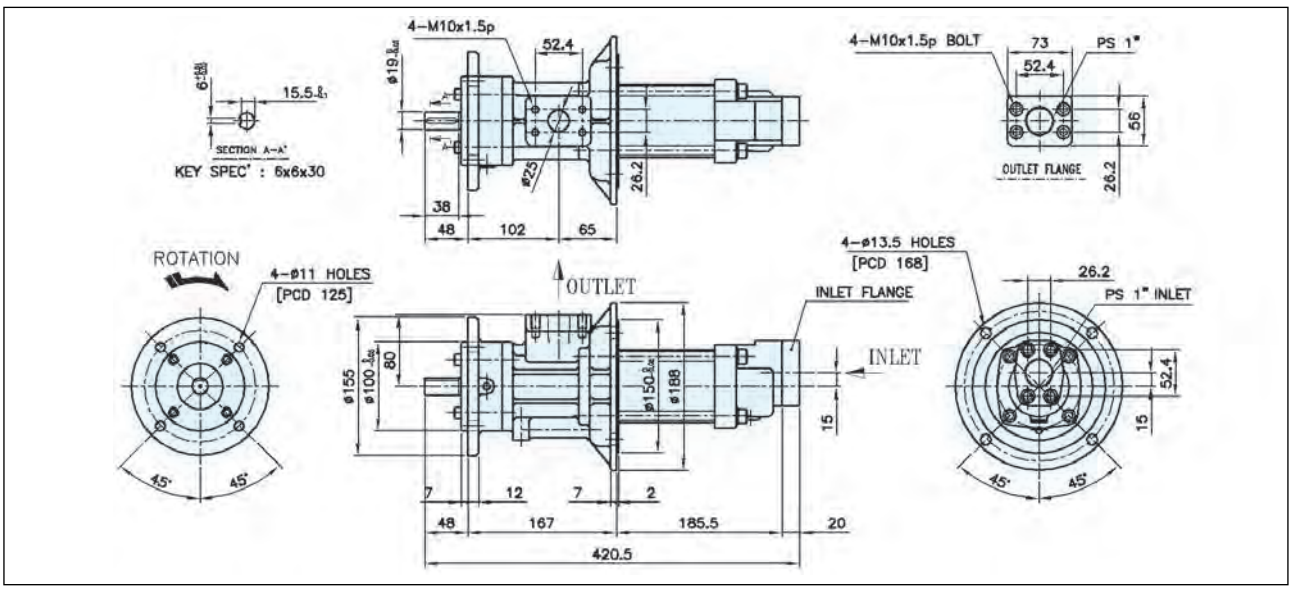

Performance Chart AJ-250 (2/4Poles - 50/60Hz)

Viscosity [cSt]	Poles	4 Poles				2 Poles			
	rpm	1500		1800		3000		3600	
	Pressure [MPa]	Discharge Volume [ℓ/min]	Motor OutPut [kW]	Discharge Volume [ℓ/min]	Motor OutPut [kW]	Discharge Volume [ℓ/min]	Motor OutPut [kW]	Discharge Volume [ℓ/min]	Motor OutPut [kW]
2	3.0	10.0	1.2	14.2	1.4	31.1	2.4	39.6	2.9
	4.0	7.8	1.5	12.0	1.8	28.9	3.1	37.4	3.8
	5.0	5.6	1.9	9.8	2.3	26.7	3.8	35.1	4.6
	6.0	3.3	2.2	7.6	2.7	24.5	4.6	32.9	5.5
	7.0	1.1	2.6	5.3	3.1	22.2	5.3	30.7	6.4

Viscosity [cSt]	Poles	4 Poles				2 Poles			
	rpm	1500		1800		3000		3600	
	Pressure [MPa]	Discharge Volume [ℓ/min]	Motor OutPut [kW]	Discharge Volume [ℓ/min]	Motor OutPut [kW]	Discharge Volume [ℓ/min]	Motor OutPut [kW]	Discharge Volume [ℓ/min]	Motor OutPut [kW]
5	3.0	12.3	1.2	16.5	1.4	33.4	2.4	41.9	2.9
	4.0	10.5	1.5	14.7	1.8	31.6	3.1	40.1	3.8
	5.0	8.8	1.9	13.0	2.3	29.9	3.8	38.3	4.6
	6.0	7.0	2.2	11.2	2.7	28.1	4.6	36.6	5.5
	7.0	5.2	2.6	9.4	3.1	26.3	5.3	34.8	6.4

Viscosity [cSt]	Poles	4 Poles				2 Poles			
	rpm	1500		1800		3000		3600	
	Pressure [MPa]	Discharge Volume [ℓ/min]	Motor OutPut [kW]	Discharge Volume [ℓ/min]	Motor OutPut [kW]	Discharge Volume [ℓ/min]	Motor OutPut [kW]	Discharge Volume [ℓ/min]	Motor OutPut [kW]
10	3.0	13.7	1.2	17.9	1.4	34.8	2.4	43.3	2.9
	4.0	12.2	1.5	16.4	1.8	33.3	3.1	41.8	3.8
	5.0	10.7	1.9	14.9	2.3	31.8	3.8	40.3	4.6
	6.0	9.2	2.2	13.5	2.7	30.4	4.6	38.8	5.5
	7.0	7.7	2.6	12.0	3.1	28.9	5.3	37.3	6.4

Viscosity [cSt]	Poles	4 Poles				2 Poles			
	rpm	1500		1800		3000		3600	
	Pressure [MPa]	Discharge Volume [ℓ/min]	Motor OutPut [kW]	Discharge Volume [ℓ/min]	Motor OutPut [kW]	Discharge Volume [ℓ/min]	Motor OutPut [kW]	Discharge Volume [ℓ/min]	Motor OutPut [kW]
22	3.0	15.5	1.2	19.8	1.4	36.7	2.5	45.1	3.0
	4.0	14.4	1.5	18.6	1.9	35.5	3.2	44.0	3.9
	5.0	13.3	1.9	17.5	2.3	34.4	3.9	42.9	4.8
	6.0	12.2	2.3	16.4	2.7	33.3	4.7	41.8	5.6
	7.0	11.1	2.6	15.3	3.2	32.2	5.4	40.6	6.5

Viscosity [cSt]	Poles	4 Poles				2 Poles			
	rpm	1500		1800		3000		3600	
	Pressure [MPa]	Discharge Volume [ℓ/min]	Motor OutPut [kW]	Discharge Volume [ℓ/min]	Motor OutPut [kW]	Discharge Volume [ℓ/min]	Motor OutPut [kW]	Discharge Volume [ℓ/min]	Motor OutPut [kW]
32	3.0	17.2	1.2	21.4	1.5	38.3	2.6	46.7	3.2
	4.0	16.4	1.6	20.6	1.9	37.5	3.3	46.0	4.1
	5.0	15.6	2.0	19.8	2.4	36.7	4.1	45.2	5.0
	6.0	14.8	2.3	19.0	2.8	35.9	4.8	44.4	5.8
	7.0	14.0	2.7	18.2	3.2	35.1	5.5	43.6	6.7

상기 표는 압력 및 토출유량을 기준으로 한 이론 모터 출력임.

Motor power in the above table is a theoretical power based on pressure and discharging volume.

AJM-250 series

AJM - 250 - 5500 H - 3 / VB

Pump Type 펌프 형식
AJM : Motor Screw pump

Motor Output 모터 출력(W)
1500W, 2200W, 3700W, 5500W, 7500W

Installing method 부착방식
H : Horizontal
V : Vertical

Delivery Pressure 사용 압력
3 : 3.0MPa, 4 : 4.0MPa
5 : 5.0MPa, 6 : 6.0MPa, 7 : 7.0MPa

Outlet Port 토출구
No Mark : Flange
VB : Relief valve

Motor Screw pumps AJM-250 series component

AJM-250 H

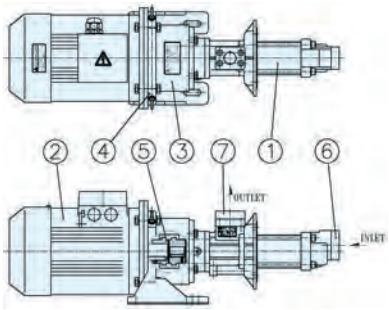

품명
①AJ-250 PUMP ②MOTOR ③BELL HOUSING ④BRACKET
⑤COUPLING ⑥IN-LET FLANGE ⑦OUT-LET FLANGE

AJM-250 V

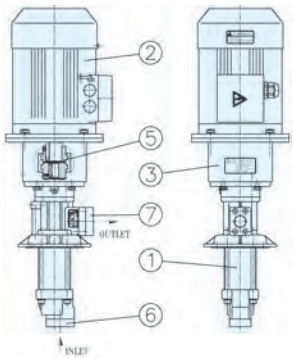

품명
①AJ-250 PUMP ②MOTOR ③BELL HOUSING ⑤COUPLING
⑥IN-LET FLANGE ⑦OUT-LET FLANGE

Bracket Dimensional

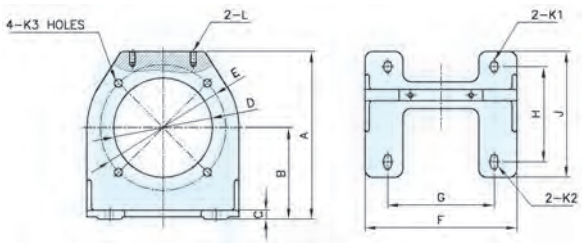

MODEL	적용 FRAME	DIMENSION												
		A	B	C	D	E	F	G	H	J	K1	K2	K3	L
BR-165	80, 90S, 90L	220	120	12	ø148	PCD 165	200	140	125	165	10 × 15	10 × 20	ø11	M8
BR-215	100L, 112M	230	130	18	ø180	PCD 215	230	160	140	200	12 × 17	12 × 22	ø13	M8
BR-265	132S, 132M	329	183	26	ø240	PCD 265	295	216	178	270	12 × 22	12 × 22	ø14	M10
BR-300	160M, 160L	380	205	20	ø265	PCD 300	350	254	254	370	16 × 31	16 × 31	ø18	M12

Bell Housing Dimensional

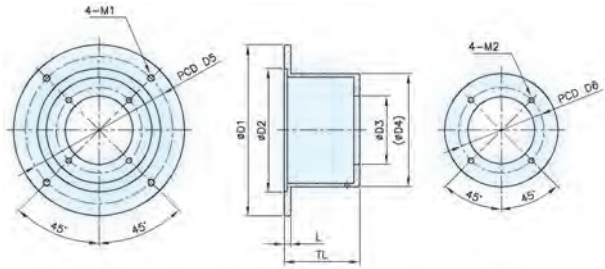

MODEL	적용 FRAME	적용 PUMP	DIMENSION									
			D1	D2	D3	D4	D5	D6	M1	M2	L	TL
BH-165A	80,90S,90L	AJ-250	200	130	100	140	165	125	M10	M10	10	100
BH-215A	100L,112M		250	180	100	165	215	125	M12	M10	10	112
BH-265A	132S,132M		300	230	100	217	265	125	M12	M10	10	130
BH-300A	160M,160L		350	250	100	217	300	125	M16	M10	12	162

Pressure Relif Valve : BVPA

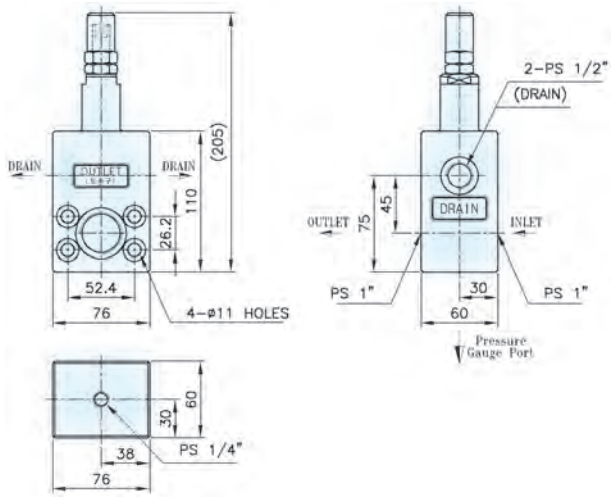

Typical Applications 적용범위

- BVPA 타입 릴리프 밸브는 외부 드레인 타입으로 펌프 토출측에 바로 부착이 가능하며 릴리프 밸브 블럭에 압력계를 부착할 수 있도록 되어있다.
- 저점도 오일에서도 사용이 가능하다.

- BVPA type relief valve is external drain type which can be attached on discharging side directly and to attach pressure gauge on relief valve block.
- It is to be used properly in low viscosity oil.

Adjustable Setting Valve

* Discharge range [토출유량] : 100ℓ/min
* Pressure range [압력범위] : 2.5 ~ 8.0 MPa
* Temperature range [온도범위] : 0 ~ 80℃
* Kinematics Viscosity [사용점도] : 2 ~ 100 cSt
* O-Ring Material [오링 재질] : NBR

대한민국 대표 브랜드!!

공작기계 발전에는 늘 아륭이 함께합니다!!!

A-RYUNG The leading (pump) manufacturer in Korea.
A-RYUNG joins the development of Korean machine tools.

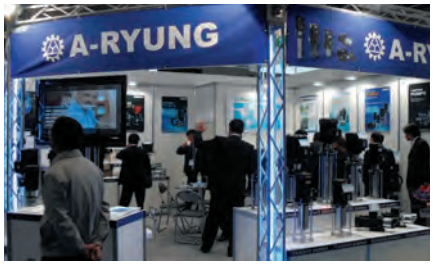

1976. 5 아륭기공(주) 설립
Established as A-RYUNG Machinery Industry Co. Ltd.

1980. 4 상공부지정 Oil pump 전문화 업체 지정(No.79-118)
Designated technical manufacturer of oil pump by the Ministry of Trade and Industry.

1982. 2 근대화 실천계획 승인업체지정 (중소기업진흥공단 No.81-208)
Designated as an "Approved Company of Systematization of Small & Medium Industry" by the Ministry of Trade and Industry.

1982. 5 우수중소기업 대통령표창 수상 (No. 54709)
Awarded the Korea Presidential Citation for an "Excellent Small & Medium Enterprise"

1987. 9 국산기계개발 우수업체선정 부총리상 수상 (No.87-104호)
Awarded "Excellent company for domestic machine development" by the Deputy Prime Minister.

1992. 12 자율세정 공로패 수상 (국세청)
Awarded "Self-Control company for National Tax" by National Tax Office.

1993. 5 해외시장 수출 산업상 수상 (대한무역진흥공사)
Awarded an "Export Industry Prize for Overseas Market" by the Korea Trade Center. (KOTRA)

1996. 11 "CE" 유럽안전규격 인증 (TUV Rheinland)
Authorized Conformity "EC" declaration by TUV Rheinland.

1999. 6 "EM" 기계류, 부품소재 우수품질규격 인증(한국기술표준원 No.1999-039호)
Obtaining Certification for EM Machinery, Spare parts by Korea Technique Standard Association.

1999. 11 ISO 9001 품질경영시스템 인증 (KSA)
Obtaining the ISO 9001 Certification by the KSA-QA supported by IQ-NET.

2000. 10 "CSA-c-us" 미국 및 캐나다 안전규격 인증(CSA INTERNATIONAL)
Obtained the "CSA-c-us" mark, American-Canadian Safety Standard by CSA INTERNATIONAL.

2000. 11 수출공로 산업자원부장관상 표창 (No.47955)
Awarded "The prize of Export-developing Company" by Ministry of Trade and Industry.

2003. 11 무역진흥 경제발전 공로 산자부장관 표창 수상 (No.54163)
Awarded "Prize of Trade Promotion and Industrial Development" from Ministry of Trade and Industry

2003. 12 수출공로 전라남도지사 표창 (No.1421)
Awarded "Prize of excellent Exporter" by Jeonnam Province.

2004. 11 중국현지 법인 설립 "아륭기공(다련)유한공사"
Opened China office in Dalian named "A-Ryung Dalian Co. Ltd."

2005. 12 "공작기계발전" 공로 국무총리상 표창 (No.13374C호)
Awarded "Honor of machine development" by The Prime Minister.

2006. 12 무역의 날 기념 100만불 수출탑 수상
Prized "1 Million Tower of Export" celebrating National Trade Day

2007. 4 기업부설연구소 설립
Established "Research & Development Center"

2007. 9 "MAIN-BIZ"(경영혁신형 중소기업)인증
Obtained "Main-Biz" (management innovation in small & midium Co.)

2007. 10 싱글PPM 인증취득
Obtained "Certificate of Single PPM"

2007. 10 "INNO-BIZ"(기술혁신형 중소기업)인증 "AA등급"
Obtained "Inno-biz" (management innivation in small & midium Co.) "AA Grade"

2008. 4 자랑스런 중소기업인상 수상
CEO proud of small and midium sized enterprize award

2008. 5 동탑산업훈장 수상
awarded bronze tower of industry from ministry of public administration and security

2009. 2 "NRTL" 북미 안전 인증 획득
Obtained "NRTL" Certificate.

2010. 11 최저효율제 모터 인증 (0.75kW 이상)
Motor(more than 0.75kW) based on minimum energy efficiency Korean policy will be released in 2011.

A-RYUNG MACHINERY IND. CO., LTD.

● KOREA Head office & Factory

#48, Damsun-lo, Geumseong-myeon,
Damyang-gun, Jeollanam-do
전남 담양군 금성면 담순로 48
TEL : ++82-61-380-2200
FAX : ++82-61-382-3094
URL : http://www.aryung.co.kr
E-mail : aryung@aryung.co.kr

● CHINA Branch office & Factory

#9 Tieshan East 3road Central Industrial District
Economic Development Zone Dalian City China
TEL : ++82-411-8734-6601~4
FAX : ++86-411-8734-6605
URL : http://www.aryung.co.kr
Email : a-ryung@163.com

● JAPAN Branch office & Factory

44 Shinmachi Ueda-shi Nagano-ken 386 -1434 Japan
TEL : +81-268-71-5220, +81-268-38-4119
FAX : +81-268-38-4165
Mobile : +81-90-3333-8960
URL : http://www.aryung.jp
E-mail : k-nakazawa@aryung.jp

AR2014-SCREW-EK1