pump for all, all for pump

KSQ9001:2009/ISO9001:2008

HIGH PRESSURE COOLANT SYSTEMS

A-RYUNG
www.aryung.co.kr

AR2016-HPCS-EK2

HIGH PRESSURE COOLANT SYSTEMS

Content

03 Coolant filter system

ACFS Series

ACFC Series

ACFH Series

AJ Series

10 Screw pumps

AJM-250 Series

16 T-ROTOR pumps

AMTP-CH(VB/VD) Series

ACFS Series

ACFS - T216 - 30 - B - A

- **Pump division 펌프구분**
  T216 : ATP-216
- **Pressure 압력(bar)**
  20bar / 30bar
- **필터 부착 방식**
  B : Bracket type
  C : Cabinet type
- **밸브 전환 방식**
  M : Manual
  A : Auto(Option)

- 싸이클론 원리를 이용한 필터 시스템은 고압쿨란트 전용 펌프를 부착하여 높은 압력을 필요로 하는 고정밀, 고기능의 고속회전 공작기계에 적합하게 제작되었다.
- 싸이클론 원리에 의해 제작되어, 칩(Chip)이 침체되지 않고 드레인 밸브를 통해 계속 흘러가도록 설계되었다.
- 에어 밸브가 부착되어 있어 에어를 공급함으로서 필터내의 칩(Chip)을 청소할 수 있도록 설계되어, 필터의 교환 주기를 연장 시켰다.
- 수용성 및 비수용성 절삭유 사용에 적합하다.

- ACFS series is high pressure system and is used machine and tools for high rotation.
- As being cyclone filter type, Chip will be discharged into tank via drain valve.
- ACFS series has air-valve to supply air into filter and can bo clean by itself so that improved the exchange period of filter.
- It is good for both water and oil based cutting oils.

Type	High Pre` pump		Motor				Built-in Pump
	Discharge volume l/min	Max` Pressure MPa/bar	Motor Out-put kw	Frequency Hz	Voltage V	Current A	
ACFS-T216-20	8	1.8/18	1.5	50	200/380	6.3/3.3	1500-216
	10	2.0/20		60	220/380	6.1/3.5	
ACFS-T216-30	12	2.8/28	3.0	50	200/380	10.3/5.9	3000-216
	16	3.0/30		60	220/380	10.0/5.8	

Coolant filter system

Extemal dimensions 외형도

■PLATFORM TYPE

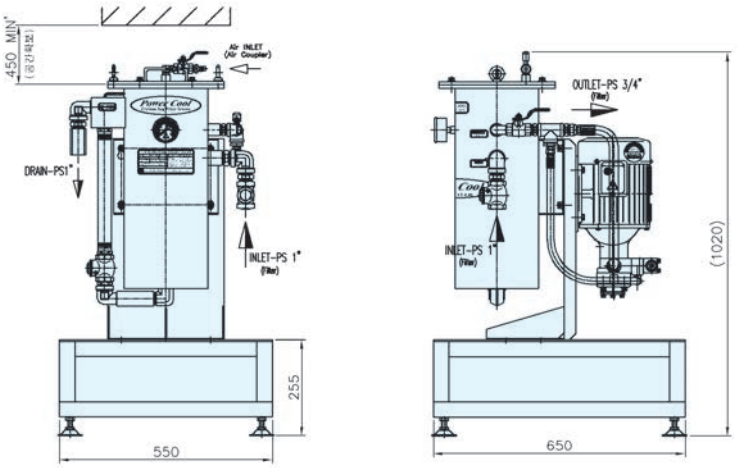

■CABINET TYPE

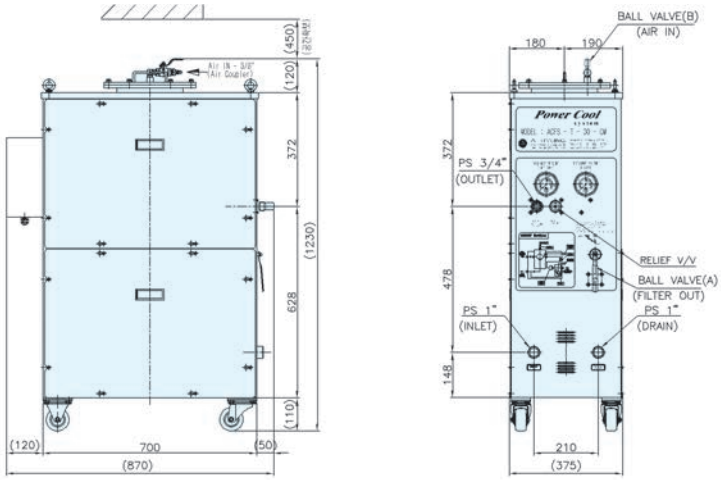

Circuit diagram 회로도

■ACFS-CM

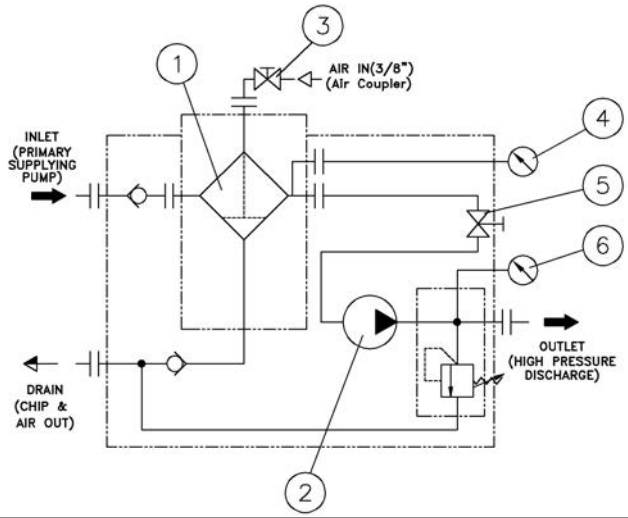

no.	부품명(Part names)
1	Bag filter
2	High pressure pump
3	Ball valve(B)
4	Pressure gauge (Supply pressure)
5	Ball valve(A)
6	Pressure gauge (Discharge pressure)

ACFC Series

ACFC - S25 - 30 - C20 - 50 - B M

Pump division 펌프구분
T216 : ATP-216
S25 : AJ-250
S29 : AJ-290

Pressure 압력(bar)
20, 30, 50, 70bar

Cyclone Filter Size
싸이클론 필터 사이즈
15A, 20A

Element Filter Size
25㎛, 50㎛

System 형식
F : Platform type(Clean tank - Non)
C : Cabinet type(Clean tank - Non)
O : Open type(Clean tank - Built)
T : Cabinet type(Clean tank - Built)

밸브 전환 방식
M : Manual type
A : Auto type

- ACFC Series는 Cyclone filter와 Element filter가 조합된 Dual filter system으로 구성되어 있으며 1차 Cyclone filter에서는 절삭칩과 같이 하중 있는 이물질을 여과하고, 2차 Element filter에서는 부유물과 같은 가벼운 이물질을 여과하여 완벽한 Filtering을 기대할 수 있다.
- 본 System에 적용 된 Cyclone filter는 교체 없이 반영구적으로 사용이 가능하며, Element filter 또한 청소주기에 따라 Air 공급만으로도 청소가 이루어지는 구조로 설계되어 내구 수명이 길고, Filter 교환에 따른 번거로움이나 부대비용이 적게 든다.
- Cyclone filter와 Element filter에서 여과 된 이물질은 각각의 Drain 출구를 통해 배출되며 사용자는 이 배출 Line에 바스켓 등을 설치하여 이물질을 용이하게 포집하여 처리 할 수가 있다.
- ACFC Series는 Cyclone filter system으로서 Pump와 Filter가 일체형으로 조합되어 있으며 외관이 Compact하여 설치장소의 제약을 적게 받고 유지 관리가 매우 용이하다.
- 수용성 절삭유등 점성이 낮은(2cSt) 유체에 사용이 적합하다.

- ACFC series is a dual filtering system that consists of a Cyclone Filter combined with an Element Filter. The Cyclone Filter can filter out heavier impurities such as metal chips, and then the Element Filter filters out the rest of the smaller and lighter ones such as floating elements to approximate the filtering to perfection.
- The Cyclone filters applied in this system can be used semi-permanently. The Element filters also have relatively longer life cycles with being cleaned just by supplying air.
- Impurities filtered by Cyclone and Element Filters get released through the outlets of the drains, and users can easily catch them by installing baskets or buckets at the discharging lines.
- ACFC series characterizes that a filter is integrated in a pump, and an ACFC can be installed at a relatively small space because of its compact size.
- It is recommended for oils with low viscosity, 2cSt or lower, such as water based cutting oils.

Type	High Pre' pump		Motor				Built-in Pump
	Discharge volume l/min	Max' Pressure MPa/bar	Motor Out-put kw	Frequency Hz	Voltage V	Current A	
ACFC-T216-20	8	1.8/18	1.5	50	200/380	6.3/3.3	1500-216
	10	2.0/20		60	220/380	6.1/3.5	
ACFC-T216-30	12	2.8/28	3.0	50	200/380	10.3/5.9	3000-216
	16	3.0/30		60	220/380	10.0/5.8	
ACFC-S29-50	40	5.0/50	5.5	50	200/380	20.1/11.5	AJ-290
	50			60	220/380	23.1/13.4	
ACFC-S25-70	20	7.0/70	5.5	50	200/380	20.1/11.5	AJ-250
	25			60	220/380	23.1/13.4	

Coolant filter system

Extemal dimensions 외형도

■ACFC-T216-20(30)-C**-FM TYPE

CYCLONE FILTER	INLET
ARCF-15A	PS 3/4"
ARCF-20A	PS 1"
ARCF-25A	PS 1"

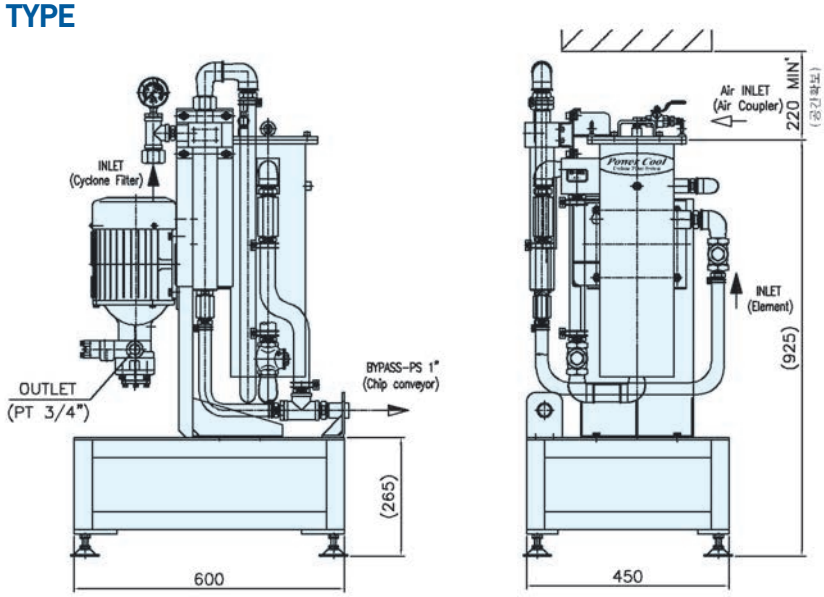

■ACFC-OM TYPE

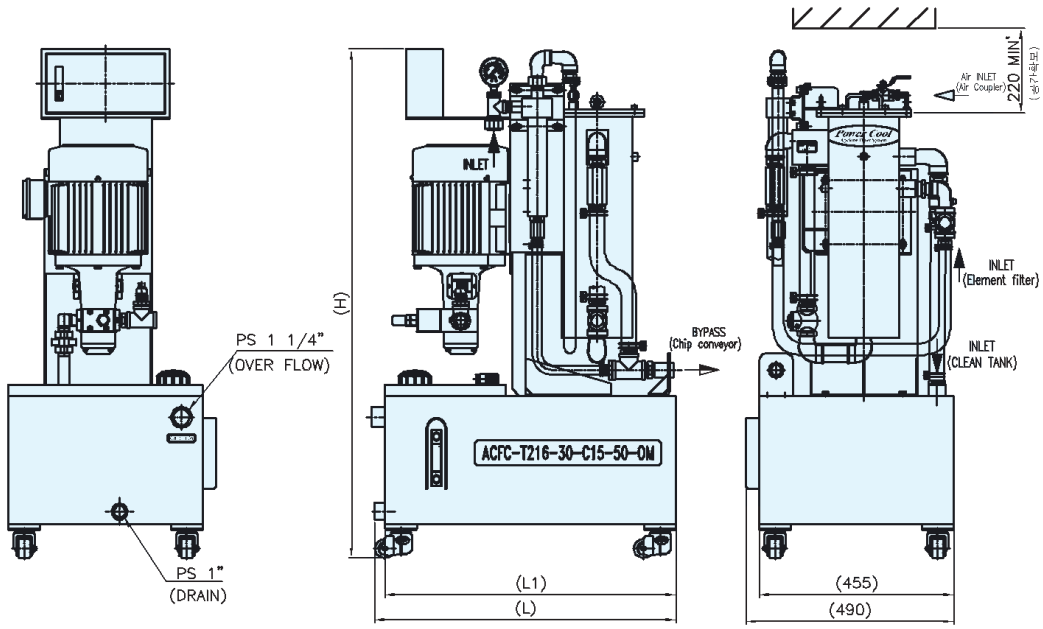

	DIMENSION				
MODEL	L	L1	H	PUMP OUTLET	PUMP DRAIN
ACFC-T216-OM	710	680	1200	PT 3/4"	PT 3/8"
ACFC-S25(29)-OM	910	880	1280	PS 1"	PS 1/2"

■ACFC-TM TYPE

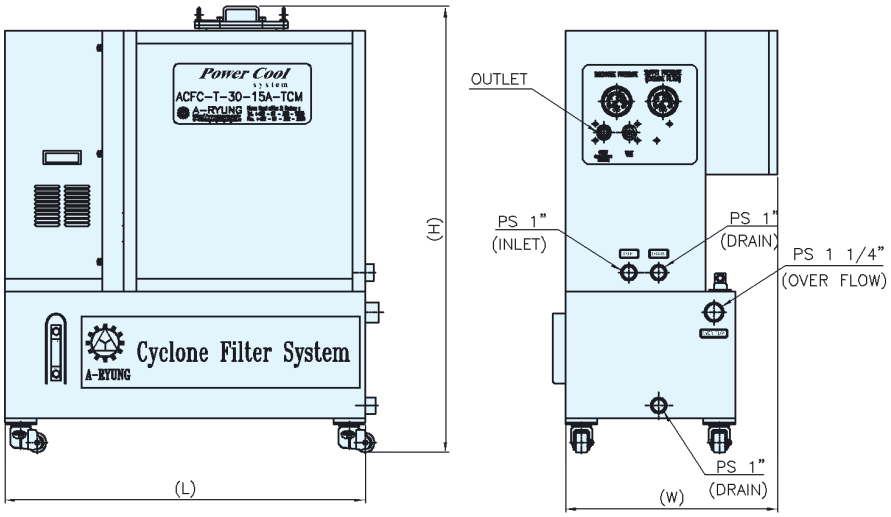

	DIMENSION			
MODEL	L	W	H	OUTLET
ACFC-T216-TM	850	550	1280	PT 3/4"
ACFC-S25(29)-TM	950	550	1280	PS 1"

CYCLONE FILTER	IN,OUT, DRAIN PORT	FLOW (l/min)
ARCF-15A	PT 1/2"	17~32
ARCF-20A	PT 3/4"	23~37
ARCF-25A	PT 1"	31~45

* CYCLONE FILTER의 공급압력은 1~3bar 사이가 형성 되게끔 시스템을 구성해야 합니다. * Supply pressure is required between 1.0 and 3.0bar.

Circuit diagram 회로도

■ACFC-***-**-C*-**TA

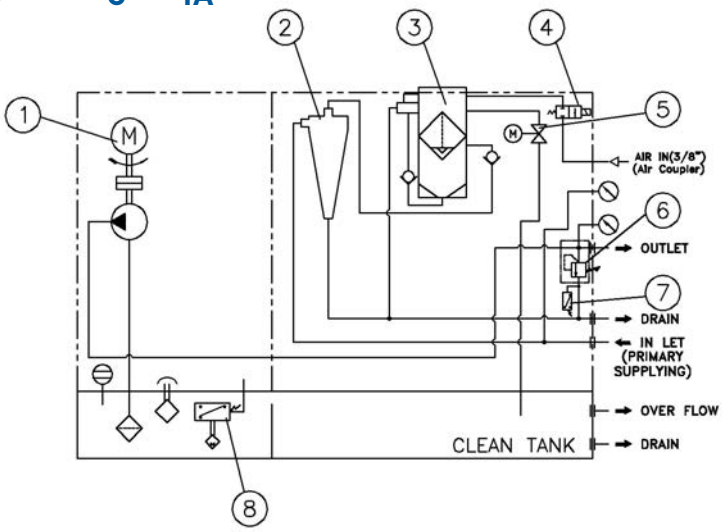

no.	부품명(Part names)
1	High pressure pump
2	Cyclone filter
3	Element filter
4	Solenoid valve
5	Electro ball valve
6	Relief valve
7	Pressure switch
8	Float switch

Coolant filter system

ACFH Series

ACFH - S25 - 70 - 50 - C A

Pump division 펌프구분
T216 : ATP-216
S25 : AJ-250
S29 : AJ-290

Pressure 압력(bar)
20, 30, 50bar
70, 120bar

Filter Size 필터 사이즈
25㎛, 50㎛

System 형식
F : Platform type(Clean tank - Non)
C : Cabinet type(Clean tank - Non)
O : Open type(Clean tank - Built)
T : Cabinet type(Clean tank - Built)

밸브 전환 방식
M : Manual type
A : Auto type

- ACFH Series는 High pressure coolant filter system으로서 특수가공 및 고속가공을 하는 CNC선반이나 자동선반의 고압절삭유 공급에 적합하다.
- ACFH Serie는 Element filter가 Suction 방식으로 장착되어 있으며, 여과된 슬러지는 Suction tank drain으로 배출되어 Duty tank의 Basket에 포집되는 구조로 설계되어 슬러지 처리가 매우 용이하다.
- 본 System에 적용된 Element filter는 청소주기에 따라 Air 공급만으로도 청소가 이루어지는 구조로 설계되어 내구 수명이 길고 Filter 교환에 따른 번거로움이나 부대비용이 적게 든다.
- 고압 Coolant pump와 Filter가 일체형으로 조합되어 있으며, Compact한 Cabinet type으로 설계되어 외관이 미려하고 설치장소의 제약을 적게 받는다.
- 제품사용의 특징
  일반강재 및 난삭재 가공 시 절삭속도 향상 절삭 Chip을 작은 조각으로 절단하여 배출시킴으로서 고속가공이 가능하고 공작물의 조도 개선 및 공구수명 연장
- 비수용성 절삭유등 점성이 있는(10cSt~32cSt) 유체에 사용이 적합하다.

- ACFH, as a high pressure filtering system, suits for supplying high pressure cutting oil to CNC or automatic lathes.
- The way that the Element filters are installed is the suction technology. Since the filtered sludge gets discharged to the suction tank drain and then gets caught in the basket at the Duty Tank, it is very easy to dispose the filtered sludge.
- The Element Filter applied to this system is designed to be cleaned just by supplying air depending on the cleaning cycle, so it lasts longer, and is easy for a user to replace it with a new one and take less maintenance cost.
- ACFH series, filters being integrated in the coolant pumps, depends less on the size of the installation space with its compact cabinet type design.
- Benefits of using ACFH
  ACFH improves the speed of processing structural steels or any rigid materials. By discharging after cutting chips up, ACFH makes high speed processing possible and improves surface coefficient.
- It is recommended for oils with high viscosity, between 10 and 32cSt, such as oil based cutting oils.

Type	High Pre' pump		Motor				Built-in Pump
	Discharge volume l/min	Max' Pressure MPa/bar	Motor Out-put kw	Frequency Hz	Voltage V	Current A	
ACFH-30	26	3/30	3.0	50	200/380	10.1/5.8	AJ-250
	32			60	220/380	11.0/6.4	
	40			50	200/380	10.1/5.8	AJ-290
	50			60	220/380	11.0/6.4	
ACFH-50	23	5/50	4.0	50	200/380	14.2/8.2	AJ-250
	28			60	220/380	15.4/8.9	
	40			50	200/380	14.2/8.2	AJ-290
	50			60	220/380	15.4/8.9	
ACFH-70	20	7/70	5.5	50	200/380	20.0/11.5	AJ-250
	25			60	220/380	23.1/13.4	
ACFH-120	12	12/120	5.5	50	200/380	20.0/11.5	AJ-***
	15			60	220/380	23.1/13.4	

External dimensions 외형도

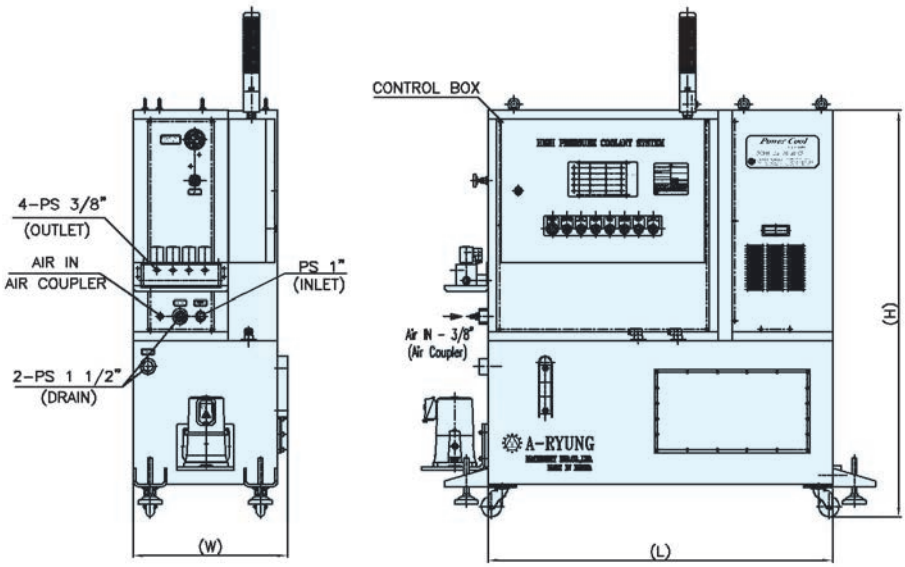

MODEL	DIENSION		
	W	L	H
ACFH-30 ACFH-50	420	1000	1420
ACHF-70 ACHF-120	450	1200	1420

Circuit diagram 회로도

■ACFC-***-**-C*-**TA

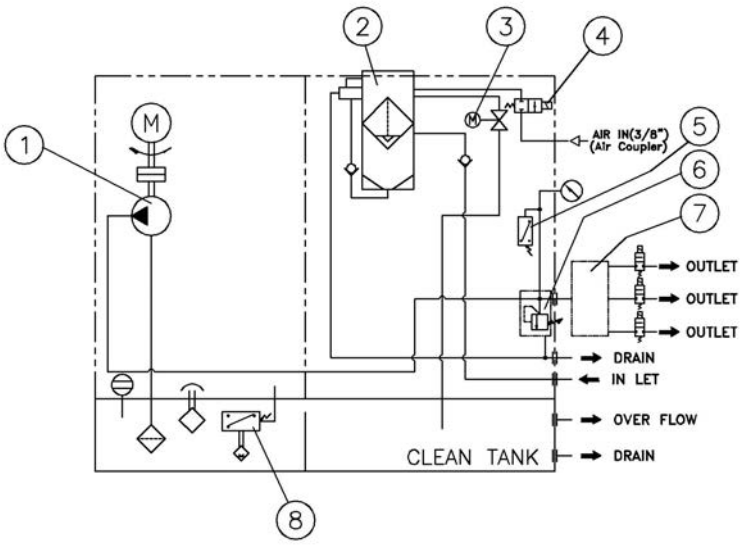

no.	부품명(Part names)
1	High pressure pump
2	Element filter
3	Electro ball valve
4	Solenoid valve
5	Pressure switch
6	Relief valve
7	Manifold block
8	Float switch

Screw pumps

AJ Series

AJ - 250 - 3 / VB

Pump Type 펌프 형식
AJ : Screw pump

Max` Discharge volume 최대유량
250 : 33.3 ℓ/min
290 : 53.3 ℓ/min

Delivery Pressure 사용 압력
3:3.0MPa, 4:4.0MPa
5:5.0MPa, 6:6.0MPa, 7:7.0MPa

Outlet Port 토출구
No Mark : Flange
VB : Relief valve

Functional characteristics standard version 기능 표준서

Admissible suction pressure [흡입압력]	-0.05 ~ 0.1 MPa
Kinematics viscosity [사용점도]	2 ~ 32 cSt
Admissible temperature [사용온도]	0 ~ 80℃
Average noise level [소음]	55 ~ 75 dB(A) at 3600 rpm according to pump dimension
Recommended filtration [권장 필터]	25㎛ MAX', Suction side (not abrasive contaminant)
Direction of rotation [회전방향]	Clockwise, as seen from the driving side

⚠ 주의 사항 : 부식 및 녹 발생 유체 사용 시 펌프의 수명 및 성능저하의 원인이 됩니다.
WARNING : To prohibit liquid which causes corrosion & rust. Otherwise It might be slowed down performance and a long pump life.

※상기제품은 고압 클린트 전용 펌프입니다. 다른 용도로 펌프로 사용하고자 할 때는 필히 본사 기술팀에 문의 바랍니다.
※For different functional characteristics, please contact our technical team.

Extemal dimensions 외형도

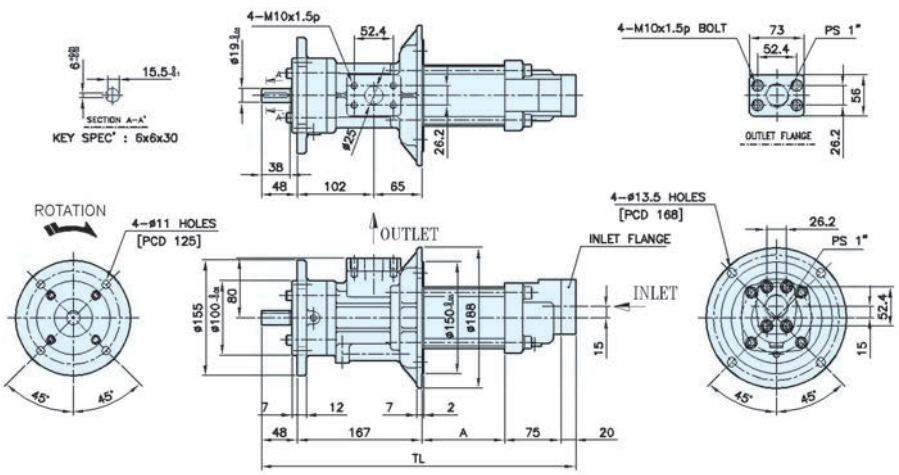

구 분	A	TL
3.0~5.0MPa	70.5	380.5
6.0~7.0MPa	110.5	420.5

Application 용도

1. 공작기계
2. 깊은 홀을 뚫는 기계
3. 유압기계
4. 제철산업
5. 제지기계
6. 풍력산업
7. 조선
8. 플랜트 산업
9. 댐건설

1. Cooling and lubrication on metal working machine
2. Deep hole driving machines
3. Hydraulic machines
4. Steel industry
5. Paper industry
6. Wind velocity industry
7. Shipbuilding industry
8. Plant industry
9. Dam industry

How a Screw Pump Work 펌프 작동 원리

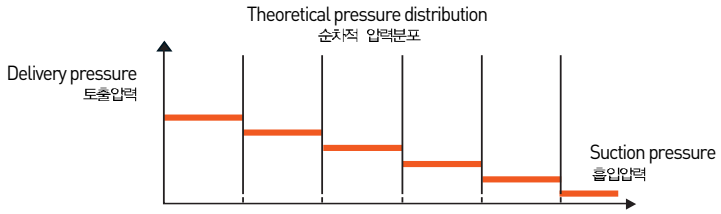

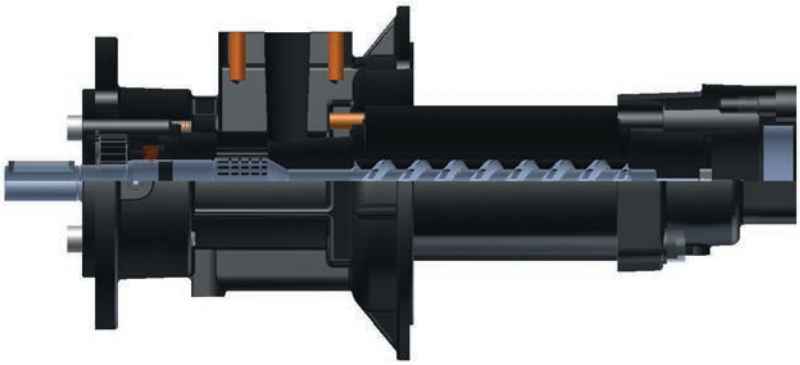

스크류 펌프는 흡입측에서 토출측으로 진행 되어질때 펌프안에 발생하는 압력을 흡입과 토출이 일정하게 유지할 수 있게 펌프 안에 내부 드레인 홀이 설치되어 있어서 내부에 스크류가 역학적으로 균형이 잡히게 설계 되어있다.

Due to the three screw set, The area between the screw thread and pump body form sealed chambers that are of uniform volume. Rotation of the screws forms and moves these chambers from the suction to discharge port. Pressure is raised along the screw length until it reaches the required working pressure. This also provides internal lubrication and provides the screws with hydrostatic balancing.

Pump Features 펌프 특징 및 장점

1. 저소음
2. 맥동이 낮음
3. 자흡력이 뛰어남
4. 저점도 사용이 가능
5. 내구성이 뛰어남

1. Very low noise levels
2. Very low pulsation level
3. High self priming capacity
4. Wide compatibility with low viscosity media
5. Low pump maintenance

Performance Chart AJ-250 (2/4Poles - 50/60Hz)

Viscosity [cSt]	Poles	4 Poles				2 Poles			
	rpm	1500		1800		3000		3600	
	Pressure [MPa]	Discharge Volume [ℓ/min]	Motor OutPut [kW]	Discharge Volume [ℓ/min]	Motor OutPut [kW]	Discharge Volume [ℓ/min]	Motor OutPut [kW]	Discharge Volume [ℓ/min]	Motor OutPut [kW]
2	3.0	8.4	1.5	12.0	1.5	25.2	2.2	30.3	3.7
	4.0	6.5	1.5	10.1	1.5	23.3	3.7	28.4	3.7
	5.0	4.7	2.2	8.2	2.2	21.4	3.7	26.5	5.5
	6.0	2.8	2.2	6.4	3.7	19.6	5.5	24.7	5.5
	7.0	0.9	2.2	4.5	3.7	17.7	5.5	22.8	5.5

Viscosity [cSt]	Poles	4 Poles				2 Poles			
	rpm	1500		1800		3000		3600	
	Pressure [MPa]	Discharge Volume [ℓ/min]	Motor OutPut [kW]	Discharge Volume [ℓ/min]	Motor OutPut [kW]	Discharge Volume [ℓ/min]	Motor OutPut [kW]	Discharge Volume [ℓ/min]	Motor OutPut [kW]
5	3.0	10.3	1.5	13.9	1.5	27.1	2.2	32.2	3.7
	4.0	8.8	1.5	12.4	1.5	25.6	3.7	30.7	3.7
	5.0	7.4	2.2	10.9	2.2	24.1	3.7	29.2	5.5
	6.0	5.9	2.2	9.4	3.7	22.6	5.5	27.7	5.5
	7.0	4.4	2.2	7.9	3.7	21.1	5.5	26.2	5.5

Viscosity [cSt]	Poles	4 Poles				2 Poles			
	rpm	1500		1800		3000		3600	
	Pressure [MPa]	Discharge Volume [ℓ/min]	Motor OutPut [kW]	Discharge Volume [ℓ/min]	Motor OutPut [kW]	Discharge Volume [ℓ/min]	Motor OutPut [kW]	Discharge Volume [ℓ/min]	Motor OutPut [kW]
10	3.0	11.5	1.5	15.1	1.5	28.2	2.2	33.3	3.7
	4.0	10.3	1.5	13.8	1.5	27.0	3.7	32.1	3.7
	5.0	9.0	2.2	12.6	2.2	25.7	3.7	30.8	5.5
	6.0	7.8	2.2	11.3	3.7	24.5	5.5	29.6	5.5
	7.0	6.5	2.2	10.1	3.7	21.3	5.5	28.4	5.5

Viscosity [cSt]	Poles	4 Poles				2 Poles			
	rpm	1500		1800		3000		3600	
	Pressure [MPa]	Discharge Volume [ℓ/min]	Motor OutPut [kW]	Discharge Volume [ℓ/min]	Motor OutPut [kW]	Discharge Volume [ℓ/min]	Motor OutPut [kW]	Discharge Volume [ℓ/min]	Motor OutPut [kW]
22	3.0	13.0	1.5	16.6	1.5	29.8	2.2	34.9	3.7
	4.0	12.1	1.5	15.7	2.2	28.9	3.7	34.0	3.7
	5.0	11.2	2.2	14.7	2.2	27.9	3.7	33.0	5.5
	6.0	10.2	2.2	13.8	3.7	27.0	5.5	32.1	5.5
	7.0	9.3	2.2	12.8	3.7	26.0	5.5	31.1	5.5

Viscosity [cSt]	Poles	4 Poles				2 Poles			
	rpm	1500		1800		3000		3600	
	Pressure [MPa]	Discharge Volume [ℓ/min]	Motor OutPut [kW]	Discharge Volume [ℓ/min]	Motor OutPut [kW]	Discharge Volume [ℓ/min]	Motor OutPut [kW]	Discharge Volume [ℓ/min]	Motor OutPut [kW]
32	3.0	14.4	1.5	18.0	1.5	31.2	2.2	36.3	3.7
	4.0	13.8	1.5	17.3	2.2	30.5	3.7	35.6	3.7
	5.0	13.1	2.2	16.6	2.2	29.8	3.7	34.9	5.5
	6.0	12.4	2.2	16.0	3.7	29.2	5.5	34.3	5.5
	7.0	11.8	2.2	15.3	3.7	28.5	5.5	33.6	7.5

- 상기 표는 압력 및 토출유량을 기준으로 한 이론 모터 출력임.
- Motor power in the above table is a theoretical power based on pressure and discharging volume.

Performance Chart AJ-290 (2/4Poles - 50/60Hz)

Viscosity [cSt]	Poles	4 Poles				2 Poles			
	rpm	1500		1800		3000		3600	
	Pressure [MPa]	Discharge Volume [ℓ/min]	Motor OutPut [kW]	Discharge Volume [ℓ/min]	Motor OutPut [kW]	Discharge Volume [ℓ/min]	Motor OutPut [kW]	Discharge Volume [ℓ/min]	Motor OutPut [kW]
2	1.0	18.7	0.75	23.7	1.5	47.4	1.5	58.1	2.2
	2.0	16.2	1.5	21.1	1.5	44.7	2.2	55.5	3.7
	3.0	14.1	1.5	19.0	2.2	40.5	3.7	53.2	3.7
	4.0	12.0	2.2	16.8	2.2	40.2	3.7	50.9	5.5
	5.0	9.9	2.2	14.7	3.7	38.0	5.5	48.3	5.5

Viscosity [cSt]	Poles	4 Poles				2 Poles			
	rpm	1500		1800		3000		3600	
	Pressure [MPa]	Discharge Volume [ℓ/min]	Motor OutPut [kW]	Discharge Volume [ℓ/min]	Motor OutPut [kW]	Discharge Volume [ℓ/min]	Motor OutPut [kW]	Discharge Volume [ℓ/min]	Motor OutPut [kW]
5	1.0	20.0	0.75	24.8	1.5	48.5	1.5	59.4	2.2
	2.0	17.9	1.5	22.9	1.5	46.4	2.2	57.2	3.7
	3.0	16.2	2.2	21.1	2.2	44.6	3.7	55.3	3.7
	4.0	14.5	2.2	19.4	3.7	42.8	3.7	53.4	5.5
	5.0	12.8	2.2	17.7	3.7	41.0	5.5	51.6	5.5

Viscosity [cSt]	Poles	4 Poles				2 Poles			
	rpm	1500		1800		3000		3600	
	Pressure [MPa]	Discharge Volume [ℓ/min]	Motor OutPut [kW]	Discharge Volume [ℓ/min]	Motor OutPut [kW]	Discharge Volume [ℓ/min]	Motor OutPut [kW]	Discharge Volume [ℓ/min]	Motor OutPut [kW]
10	1.0	20.7	0.75	25.5	0.75	49.4	1.5	59.1	2.2
	2.0	19.0	1.5	23.9	1.5	47.5	2.2	58.2	3.7
	3.0	17.5	2.2	22.3	2.2	45.8	3.7	56.6	3.7
	4.0	16.0	2.2	20.9	3.7	44.3	5.5	54.9	5.5
	5.0	14.6	2.2	19.4	3.7	42.7	5.5	53.4	5.5

Viscosity [cSt]	Poles	4 Poles				2 Poles			
	rpm	1500		1800		3000		3600	
	Pressure [MPa]	Discharge Volume [ℓ/min]	Motor OutPut [kW]	Discharge Volume [ℓ/min]	Motor OutPut [kW]	Discharge Volume [ℓ/min]	Motor OutPut [kW]	Discharge Volume [ℓ/min]	Motor OutPut [kW]
22	1.0	21.6	0.75	26.6	0.75	50.2	1.5	61.0	1.5
	2.0	20.3	1.5	25.2	1.5	48.8	3.7	59.6	3.7
	3.0	19.2	2.2	24.1	2.2	47.6	3.7	58.3	3.7
	4.0	18.1	2.2	22.9	3.7	46.3	5.5	57.0	5.5
	5.0	17.0	3.7	21.8	3.7	45.1	5.5	55.7	5.5

Viscosity [cSt]	Poles	4 Poles				2 Poles			
	rpm	1500		1800		3000		3600	
	Pressure [MPa]	Discharge Volume [ℓ/min]	Motor OutPut [kW]	Discharge Volume [ℓ/min]	Motor OutPut [kW]	Discharge Volume [ℓ/min]	Motor OutPut [kW]	Discharge Volume [ℓ/min]	Motor OutPut [kW]
32	1.0	22.4	0.75	27.3	0.75	51.1	1.5	61.8	2.2
	2.0	21.4	1.5	26.4	1.5	49.8	3.7	60.7	3.7
	3.0	20.7	2.2	25.6	2.2	48.8	3.7	59.7	5.5
	4.0	19.9	2.2	24.8	3.7	47.9	5.5	58.5	5.5
	5.0	19.1	3.7	23.8	3.7	46.9	5.5	57.3	7.5

- 상기 표는 압력 및 토출유량을 기준으로 한 이론 모터 출력임.
- Motor power in the above table is a theoretical power based on pressure and discharging volume.

Screw pumps

AJM-250 Series

AJM - 250 - 5500 H - 3 / VB

Pump Type 펌프 형식
AJM : Motor Screw pump

Max` Discharge volume 최대 유량
250 : 33.3 ℓ/min
290 : 53.3 ℓ/min

Motor Output 모터 출력(W)

Installing method 부착방식
H : Horizontal
V: Vertical

Delivery Pressure 사용 압력
3:3.0MPa, 4:4.0MPa
5:5.0MPa, 6:6.0MPa, 7:7.0MPa

Outlet Port 토출구
No Mark : Flange
VB : Relief valve

Motor Screw pumps AJM series component

■AJM-H

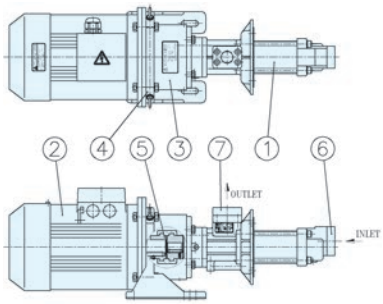

품명 [PART NAME]
1) AJ PUMP 2) MOTOR 3) BELL HOUSING 4) BRAKCET
5) COUPLING 6) IN-LET FLANGE 7) OUT-LET FLANGE

■AJM-V

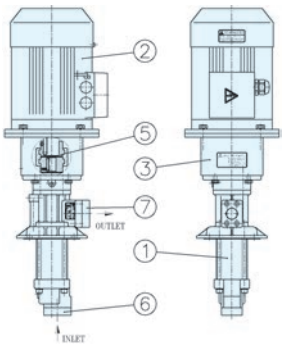

품명 [PART NAME]
1) AJ PUMP 2) MOTOR 3) BELL HOUSING 5) COUPLING
6) IN-LET FLANGE 7) OUT-LET FLANGE

Bracket Dimensional

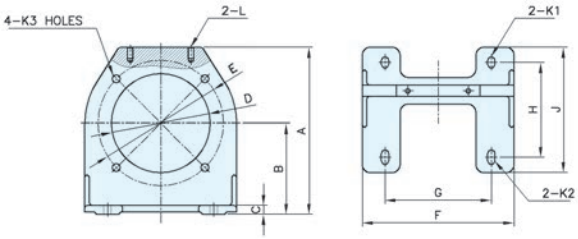

MODEL	적용 FRAME	DIMENSION												
		A	B	C	D	E	F	G	H	J	K1	K2	K3	L
BR-165	80, 90S, 90L	220	120	12	ø148	PCD 165	200	140	125	165	10 × 15	10 × 20	ø11	M8
BR-215	100L, 112M	230	130	18	ø180	PCD 215	230	160	140	200	12 × 17	12 × 22	ø13	M8
BR-265	132S, 132M	329	183	26	Ø240	PCD 265	295	216	178	270	12 × 22	12 × 22	Ø14	M10
BR-300	160M, 160L	380	205	20	Ø265	PCD 300	350	254	254	370	16 × 31	16 × 31	Ø18	M12

Bell Housing Dimensional

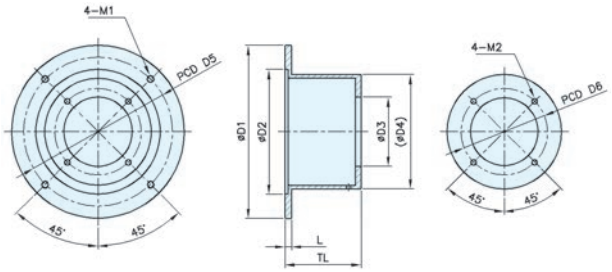

MODEL	적용FRAME	적용PUMP	DIMENSION									
			D1	D2	D3	D4	D5	D6	M1	M2	L	TL
BH-165A	80,90S,90L	AJ-250	200	130	100	140	165	125	M10	M10	10	100
BH-215A	100L,112M		250	180	100	165	215	125	M12	M10	10	110
BH-265A	132S,132M		300	230	100	217	265	125	M12	M10	10	130
BH-300A	160M,160L		350	250	100	217	300	125	M16	M10	12	162

Pressure Relief Valve : BVPA External dimenstions 외형도

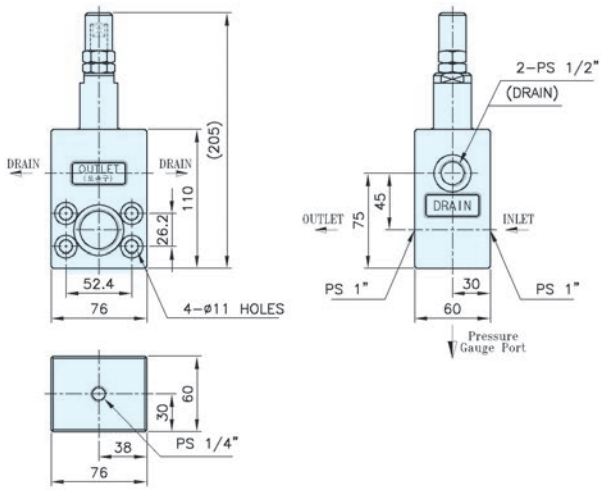

Typical Applications 적용범위

- BVPA 타입 릴리프 밸브는 외부 드레인 타입으로 펌프 토출측에 바로 부착이 가능하며 릴리프 밸브 블럭에 압력계를 부착할 수 있도록 되어있다.
- 저점도 오일에서도 사용이 가능하다.

- BVPA type relief valve is external drain type which can be attached on discharging side directly and to attach pressure gauge on relief valve block.
- It is to be used properly in low viscosity oil.

Adjustable Setting Valve

- Discharge range [토출유량] : 100 /min
- Pressure range [압력범위] : 2.5 ~ 8.0 MPa
- Temperature range [온도범위] : 0 ~ 80
- Kinematics Viscosity [사용점도] : 2 ~ 100 cSt
- O-Ring Material [오링 재질] : NBR

T-ROTOR pumps

AMTP-CH(VB/VD) Series

AMTP - 1500 - 216CH VB 2.0

- Motor Output 모터 출력(W)
- Pump division 펌프구분
- Relief valve 압력 조정 발브
  - VB : Equipped
  - VD : Drain bolck
  - No mark : None
- Setting pressure 설정압력(Mpa)

•고압 Coolant용으로 설계되었으며, 공작기계 M.C.T 및 각종 산업기계에 적합합니다.
•흡입라인에 필터를 필히 부착하여 사용하십시오.(50㎛ 이하)
•Cyclone Filter system과 조합하여 사용이 가능합니다.

•AMTP-216CH(VD) series is designed for high pressure coolant usage. it is used M.C.T & various industrial machines.
•Make sure to attache the filter in suction part (less 50ß≠)
•It can be used to assemble with cyclone filter system.

Type	1500 rpm (50Hz, 4P)				1800 rpm (60Hz, 4P)			
	Discharge volume (ℓ/min)	Maximum pressure (MPa)			Discharge volume (ℓ/min)	Maximum pressure (MPa)		
		1500W	2200W	3000W		1500W	2200W	3000W
216CH(VB,VD)-20	8	1.8	-	-	10.0	2.0	-	-
216CH(VB,VD)-25	12	-	2.3	-	16.0	-	2.5	-
216CH(VB,VD)-30	14	-	3.0	3.0	20.0	-	-	3.0

Motor Output	Frequency (Hz)	Voltage (V)	Current (A)	Motor speed (rpm)	Phase (Ø)	Ploes (P)
1500 W	50	200/380/415	6.3/3.3/3.1	1420		
	60	220/380/440	6.1/3.5/3.0	1720		
2200 W	50	200/380/415	8.8/4.7/4.3	1420	3	4
	60	220/380/440	8.3/4.8/4.1	1720		
3000 W	50	200/380/415	10.3/5.9/5.6	1420		
	60	220/380/440	10.0/5.8/5.5	1720		

◈Enclosure class 보호등급 : IP44

◈Insulation class 절연 계급 : F

•Applications 적용

Type of fluid 사용유체 : Coolant
Viscosity 동점도(40℃ 기준)
: 2 ~ 20 cSt
Temperature 사용온도
: 80℃

•Material 재질

Motor flame : Aluminum
Pump body : Cast iron
Port housing : Cast iron
Pump cover : Cast iron
Bearing : #6202zz

Shaft : Steel
Rotor : Power steel
Oil-seal : NBR
AMTP-1500-216-216CHVD
Ø15 ×35 ×7t
AMTP-2200(3000)-216CHVD
Ø19 ×35 ×8t

Extemal dimensions 외형도

■AMTP-1500-216CHVD-20

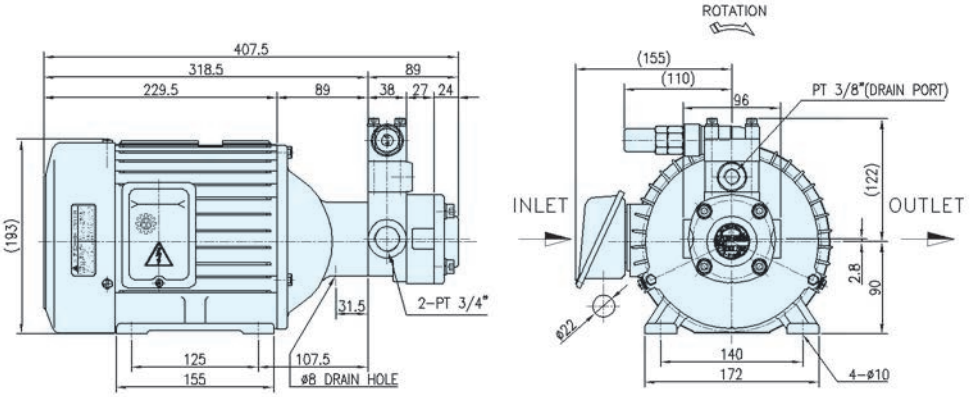

■AMTP-2200-216CHVD-25

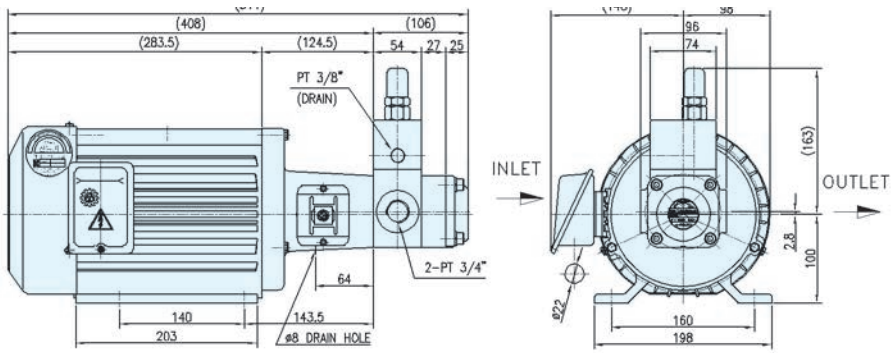

■AMTP-3000-216CHVD-30

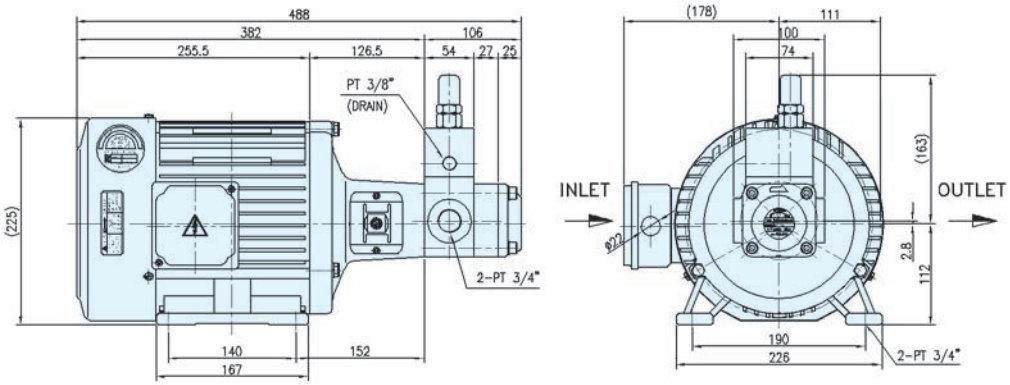

ORIFICE TEST 압력(bar)							
PUMP TYPE	FREQUENCY	ORIFICE SIZE					
		Φ1	Φ1.5	Φ2	Φ2.5	Φ3	Φ4
ATMP-1500-216CH	50Hz	27.5	24	19	15.5	11	6
	60Hz	31.5	28	24	20	15	7.5
AMTP-2200-216CH	50Hz	27	24	21	19	13	6
	60Hz	32	30	23.5	21.5	18	8.5
AMTP-3000-216CH	50Hz	26	23	17.5	14	10.5	5
	60Hz	33	29	22	18	13	7
AJM-250-5	50Hz	59	58	57	53	32	12
	60Hz	60	58.5	58.5	57	44.5	18.5
AJM-250-7	50Hz	78	77	74	52	32	13
	60Hz	80	78.5	77	73	44	19
AJM-290-5	50Hz	56	55	52	50	47	27
	60Hz	60	58	56	54	48	38.5

* 위 DATA는 수용성 절삭유(농도 8%) 유온 40℃, 점도 2cSt 기준임.(AMTP : 4Poles MOTOR, AJM : 2Poles MOTOR).
(*Avove data is tested in the viscosity 2cSt and oil temperature 40℃.)
* ORIFICE 의 HOLE은 1개 기준임(The results based on a single hole on the orifice.)
* 사용 조건 및 주변환경에 따라 DATA는 변경 될 수 있음.
(Data is subject to change depending upon operating or surrounding condition.)

대한민국 대표 브랜드!!

공작기계 발전에는 늘 아륭이 함께합니다!!!

A-RYUNG The leading (pump) manufacturer in Korea.
A-RYUNG joins the development of Korean machine tools.

▲2008년 5월 신국중소기업인대회 동남신약훈장 수여식

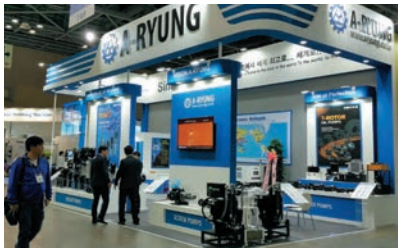

▲2016년 4월 Simtos 전시회

▲가공 Line 전경

▲주철 대시 공성

▲Coolant pump 조립 Line

▲T-rotor pump 조립 Line

1976. 5	아륭기공㈜ 설립	1976. 5	Established as A-RYUNG Machinery Industry Co. Ltd.
1980. 4	상공부지정 Oil pump 전문화 업체 지정(No.79-118)	1980. 4	Designated technical manufacturer of oil pump by the Ministry of Trade and Industry.
1982. 2	근대화 실천계획 승인업체지정 (중소기업진흥공단 No.81-208)	1982. 2	Designated as an Approved Company of Systematization of Small & Medium Industry by the Ministry of Trade and Industry.
1982. 5	우수중소기업 대통령표창 수상 (No. 54709)	1982. 5	Awarded the Korea Presidential Citation for an Excellent Small & Medium Enterprise.
1987. 9	국산기계개발 우수업체선정 부총리상 수상 (No.87-104호)	1987. 9	Awarded Excellent company for domestic machine development by the Deputy Prime Minister.
1992. 12	자율세정 공로패 수상 (국세청)	1992. 12	Awarded Self-Control company for National Tax by National Tax Office.
1993. 5	해외시장 수출 산업상 수상 (대한무역진흥공사)	1993. 5	Awarded an Export Industry Prize for Overseas Market by the Korea Trade Center. (KOTRA)
1996. 11	"CE" 유럽안전규격 인증 (TÜV Rheinland)	1996. 11	Authorized Conformity EC declaration by TÜV Rheinland.
1999. 6	"EM" 기계류, 부품소재 우수품질규격 인증 (한국기술표준원 No.1999-039호)	1999. 6	Obtaining Certification for EM Machinery, Spare parts by Korea Technique Standard Association.
1999. 11	ISO 9001 품질경영시스템 인증 (KSA)	1999. 11	Obtaining the ISO 9001 Certification by the KSA-QA supported by IQ-NET.
2000. 10	"CSA-c-us" 미국 및 캐나다 안전규격 인증 (CSA INTERNATIONAL)	2000. 10	Obtained the CSA-c-us mark, American-Canadian Safety Standard by CSA INTERNATIONAL.
2000. 11	수출공로 산업자원부장관상 표창 (No.47955)	2000. 11	Awarded The prize of Export-developing Company by Ministry of Trade and Industry.
2003. 11	무역진흥 경제발전 공로 산자부장관 표창 수상 (No.54163).	2003. 11	Awarded Prize of Trade Promotion and Industrial Development from Ministry of Trade and Industry
2003. 12	수출공로 전라남도지사 표창 (No.1421)	2003. 12	Awarded Prize of excellent Exporter by Jeonnam Province.
2004. 11	중국현지 법인 설립 "아륭기공(대련)유한공사"	2004. 11	Opened China office in Dalian named A-Ryung Dalian Co. Ltd.
2005. 12	"공작기계발전" 공로 국무총리상 표창 (No.133740호)	2005. 12	Awarded Honor of machine development by The Prime Minister.
2006. 12	무역의 날 기념 100만불 수출탑 수상	2006. 12	Prized 1 Million Tower of Export celebrating National Trade Day
2007. 4	기업부설연구소 설립	2007. 4	Established Research & Development Center
2007. 9	"MAIN-BIZ"(경영혁신형 중소기업)인증	2007. 9	Obtained Main-Biz (management innovation in small & midium Co.)
2007. 10	싱글PPM 인증취득	2007. 10	Obtained Certificate of Single PPM
2007. 10	"INNO-BIZ"(기술혁신형 중소기업)인증 "AA등급"	2007. 10	Obtained Inno-biz (management innivation in small & midium Co.)
2008. 5	동탑산업훈장 수훈(국가산업발전공로)	2008. 5	awarded bronze tower of industry from ministry of public administration and security
2009. 2	"NRTL" 북미 안정 인증 획득	2009. 2	Obtained NRTL Certificate.
2009. 3	국세청장표창(제47687호)	2009. 3	A citation from Director of the National Tax Service
2010. 11	최저효율제 모터 인증 (0.75kW 이상)	2010. 11	Motor(more than 0.75kw) based on minum energy efficiency Korean policy will be released in 2011.
2012. 2	전라남도수출상(제39호)	2012. 2	Export Award of Jeonnam
2014. 2	프리미엄 효율기준(IE3) 인증	2014. 2	IE3, Premium Efficiency, certified
2014. 10	명문장수기업상 수상	2014. 10	Noble Entrepreneur Award
2015. 3	모범납세자 부총리 겸 기획재정부 장관상 수상	2015. 3	Good Taxpayer Award from the vice prime minister
2015. 12	무역의 날 기념 300만불 수출탑 수상	2015. 12	Exporting three million dollars award

A-RYUNG MACHINERY IND. CO., LTD.

Head quarters, KOREA

#48, Damsun-ro, Keumseong-myun,
Damyang-gun, Jeonnam, Korea
전남 담양군 금성면 담순로 48(대곡리 681-1)
TEL : ++82-61-380-2200 FAX : ++82-61-382-3094
URL : http://www.aryung.co.kr Email : aryung@aryung.co.kr

Branch office & Factory, CHINA

#9 Tieshan East 3road Central Industrial District
Economic Development Zone Dalian City China
TEL : ++86-411-8734-6601~4 FAX : ++86-411-8734-6605
URL : http://www.aryung.co.kr Email : a-ryung@163.com

Branch office, JANPAN

44 Shinmachi Ueda-shi Nagano-ken 386 -1434 Japan
TEL : +81-268-71-5220, +81-268-38-4119 FAX : +81-268-38-4165
URL : http://www.aryung.jp E-mail : k-nakazawa@aryung.jp

• 본 카다로그는 제품의 품질개선을 위하여 내용은 예고 없이 변경될 수 있으므로 제품 선정시 본사 기술팀으로 문의 바랍니다.
• In addition to improving the quality of the product are subject to change without notice in selecting products please contact our technical team.