02 Series Stack Valve Pressure Take-out Blocks

JIS graphic symbols for hydraulic system

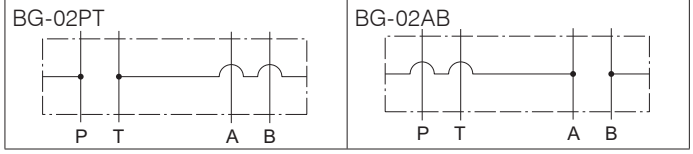

Nomenclature

※	-	BG	-	02	※※	-	55
1		2		3	4		5

1 Applicable fluid code
No designation: Petroleum-based hydraulic fluid, water-glycol hydraulic fluid
F: Phosphate ester hydraulic fluid

2 Model No.
BG: Pressure take-out block

3 Nominal diameter
02: ¼

4 Pressure take-out port
PT: Port P/T
AB: Port A/B

5 Design No. (The design No. is subject to change)

Specifications

Model code	Maximum operating pressure MPa {kgf/cm²}	Maximum flow rate L/min	Mass kg
BG-02※※-55	25 {250}	40	1

External dimension diagram

BG-02AB-55
BG-02PT-55

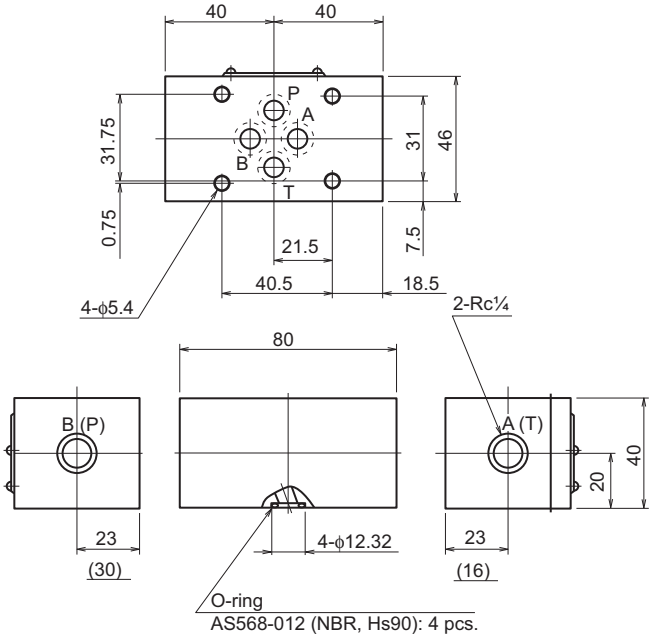

Values in parentheses show the dimensions for BG-02PT-55.

02 Series Stack Valve Blocking Blocks

JIS graphic symbols for hydraulic system

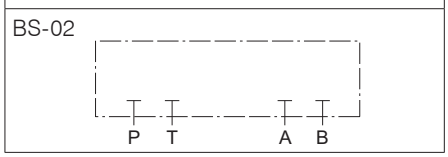

Nomenclature

※	-	BS	-	02	-	55
1		2		3		4

1 Applicable fluid code
No designation: Petroleum-based hydraulic fluid, water-glycol hydraulic fluid
F: Phosphate ester hydraulic fluid

2 Model No.
BS: Blocking block

3 Nominal diameter
02: ¼

4 Design No. (The design No. is subject to change)

Specifications

Model code	Maximum operating pressure MPa {kgf/cm²}	Mass kg
BS-02-55	25 {250}	0.8

External dimension diagram

BS-02-55

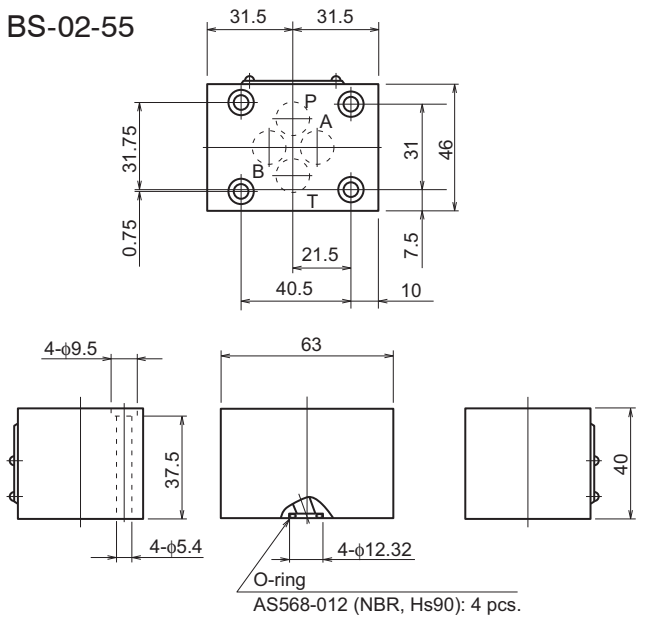

Handling

Mounting bolts are not provided with the blocking block. Order them separately as required.