1LS□-J401 SERIES ALL STAINLESS STEEL LIMIT SWITCHES

Continuous use under water or in other harsh environments or corrosive gas atmospheres is possible.

- Superior resistance to salt and corrosive gases
- May be used under water.

APPLICATIONS

- Chemical plants (acid and alkali resistant)
- Harbor facilities (protected against salt water corrosion)
- Dams and floodgates

ORDER GUIDE

Actuator		Cable type	Catalog listing
Name	Shape		
Roller lever		None	**1LS1-J401**
		30m	**1LS1-J401-03**
		50m	**1LS1-J401-05**
Adjustable roller lever type		None	**1LS3-J401**
		30m	**1LS3-J401-03**
		50m	**1LS3-J401-05**
Without lever	—	None	**1LS2-J401**
		30m	**1LS2-J401-03**
		50m	**1LS2-J401-05**

*Special requests for different cable lengths are acceptable in 10m increments.

PERFORMANCE

Standards	**Compliance**		NECA C 4508
Structure	**Contact form**		2-circuit double break
	Terminal type		M4 screw (switch terminal screw)
	Contact type		Rivet
	Protective structure		IP67 (IEC 60529, JIS C 0920)
Electrical performance	**Electrical rating**		See Table 1.
	Dielectric strength	**Between non-continuous terminals**	1,000Vac, 50/60Hz for 1 minute
		Between each terminal and non-live metal part	2,000Vac, 50/60Hz for 1 minute
	Insulation resistance		Min. 100MΩ(by 500Vdc megger)
	Initial contact resistance		Max. 50mΩ(6 to 8Vdc, thermal current 1A, voltage drop method)
	Recommended min. contact operating voltage/current		24Vdc 10mA, 100Vac 10mA
Mechanical performance	**Actuator strength**		Withstands load 5 times O.F. (operating direction for 1 minute)
	Terminal strength		Withstands tightening force of 1.5N·m for 1 minute
	Impact resistance		Contacts open for 1ms max. at 300m/s^2 in free position and total travel position
	Vibration resistance		1.5mm peak-to-peak amplitude, frequency 10 to 55Hz, for 2 continuous hours Contacts open for 1ms max. in free position and total travel position.
	Allowable operating speed		1.7mm/s to 0.5m/s
	Operating frequency		Max. 120 operations/minute
Life	**Mechanical**		Min.2 million operations (with O.T. at 1/3 to 2/3 the rated value)
	Electrical		Min. 100,000 operations (tested at rated load and operating freq. of 20 times/minute)
Ambient operating conditions	**Temperature**		−5 to +70˚C(freezing not allowed)
	Humidity		Max. 98% RH
Recommended tightening torque	**Body**		5 to 6N·m (M5 hexagon socket head bolt)
	Cover		1.3 to 1.7N·m (M4 screw)
	Head		0.8 to 1.2N·m (M3.5 screw)
	Lever		4 to 5.2N·m (M5 hexagon socket head bolt)
	Terminal screw		1.0 to 1.4N·m (M4 binding head machine screw)

●Circuit diagram

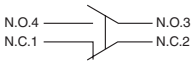

EXTERNAL DIMENSIONS

(unit: mm)

●Basic dimensions

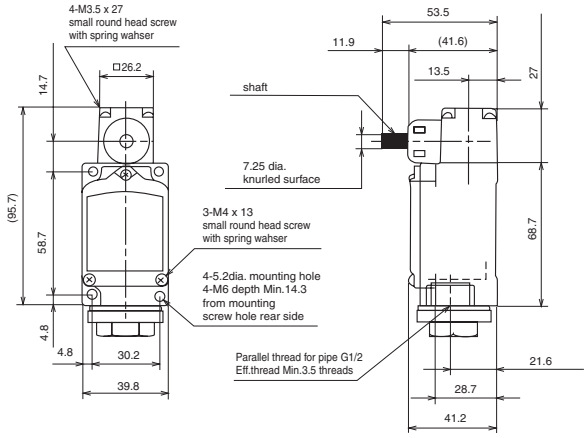

●Actuator mounting dimensions

Roller lever type

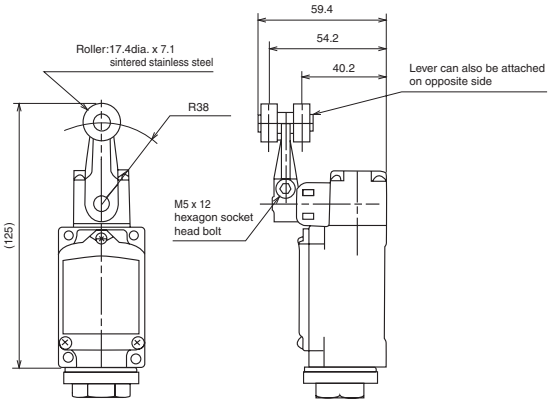

Adjustable roller lever type

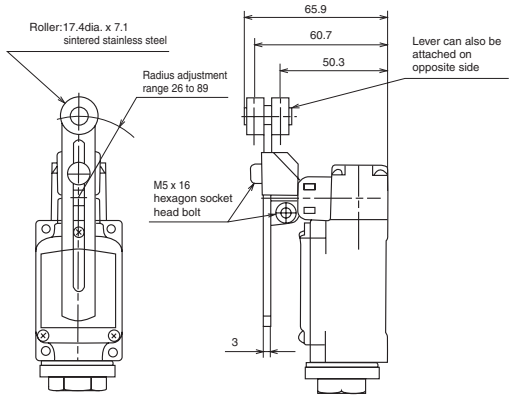

OPERATING CHARACTERISTICS

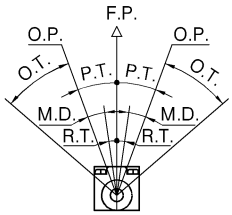

Characteristics	**O.F. (Max. N)**	13.4
	R.F. (Min. N)	2.2
	P.T. (Max. °)	20
	M.D. (Max. °)	12
	O.T. (Min. °)	30
	R.T. (Min. °)	5

PRECAUTIONS FOR USE

1. Attaching switches

- Tighten each of the parts on the limit switch according to the appropriate tightening torques listed in the performance tables. Overtightening damages screws and other parts. On the other hand, insufficient tightening of screws lowers the effectiveness of the seal and reduces various performance characteristics.
- Do not leave or use covers and conduit parts open. Water, dirt, or dust may enter, which causing malfunction.
- Prevent impact to the lever body and head. Failure to do so might deform the actuator or cause defective switch return.
- Do not use silicone rubber electrical lead insulation, silicone adhesive or grease containing silicone. Doing so might result in defective electrical conductivity.

2. Wiring

- Do not perform wiring with the power ON. Doing so might cause electric shock, or the machine may start unexpectedly, causing an accident.
- Use crimp-type terminal lugs with covered insulation for electrical leads to prevent contact with covers and housings. If a crimp-type terminal lug contacts a cover, the cover may no longer shut or a ground fault may occur.
- Use sealed connectors (**PA1** Series, etc. sold separately) or flexible tubing (**PA3** Series) with IP67 or equivalent seal for conduits.
- Firmly tighten covers and conduits. If covers and conduits are not sufficiently tightened, the seal will be impaired and switch performance will no longer be assured.

3. Adjusting switches

- Do not apply excessive force (5 times O.F.) to the actuator beyond the total travel position. Doing so might damage the switch.
- Keep overtravel between 1/3 to 2/3 of the rated value. Small overtravel might cause the contacts to rattle due to vibration and impact, or may result in defective contact.